TR160-2 Machine Layout Drawing

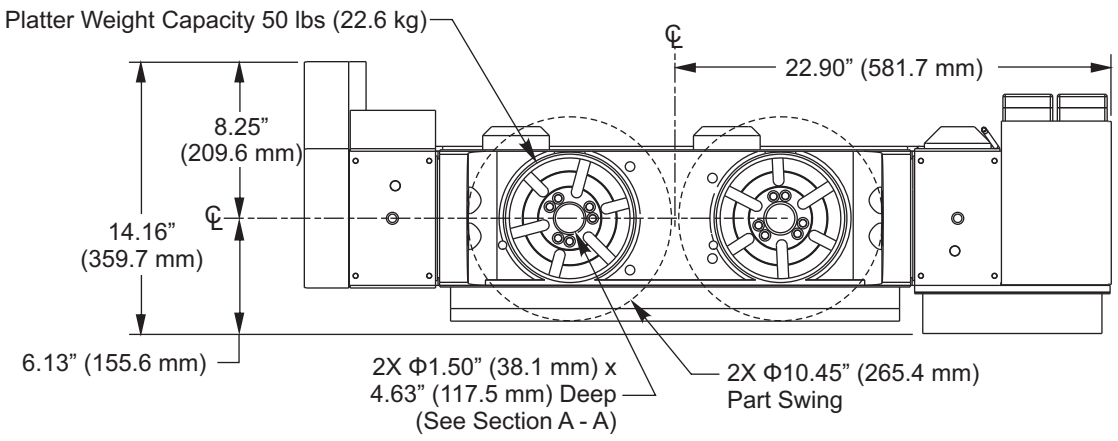

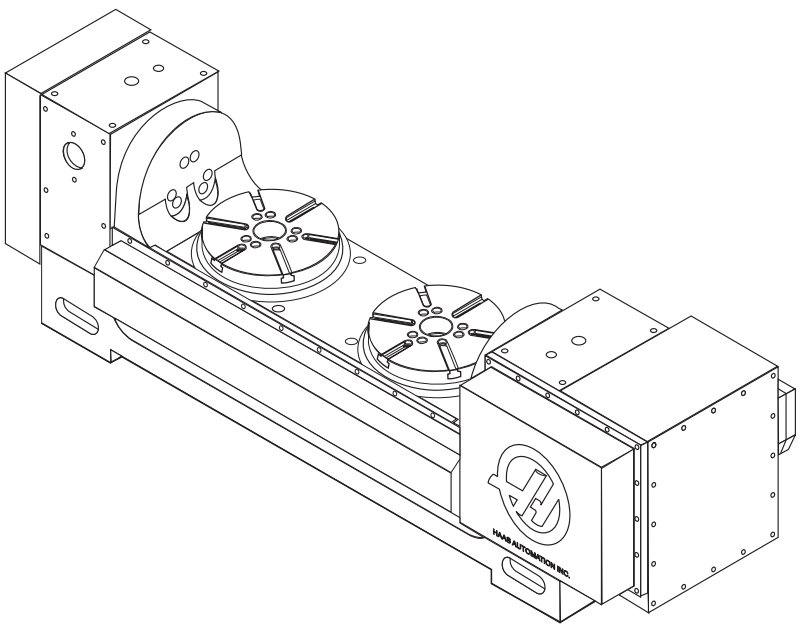

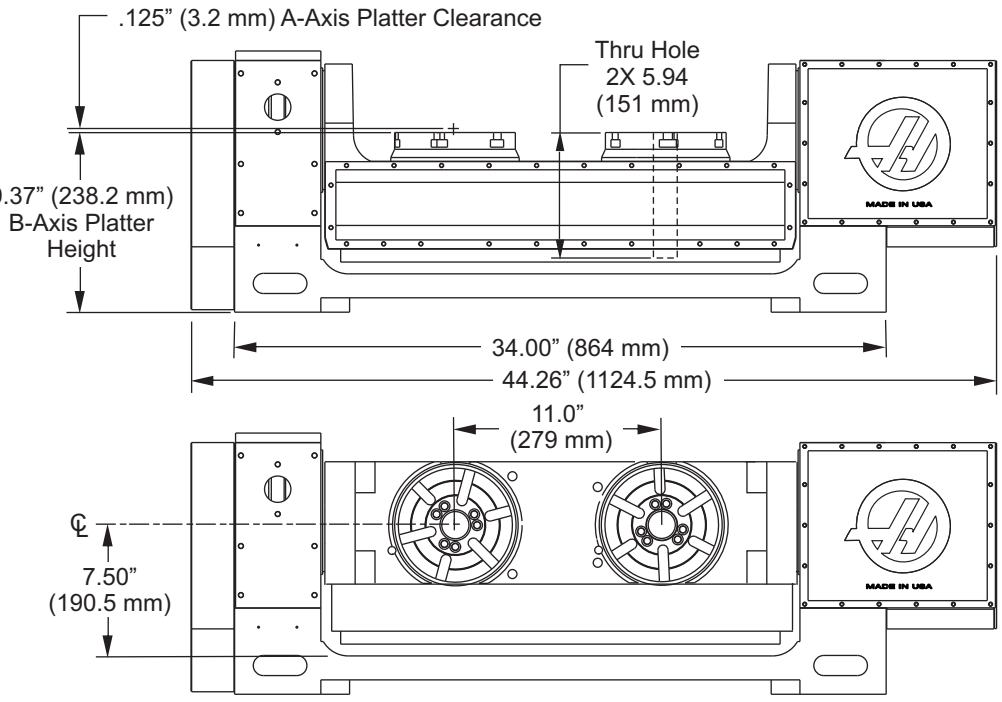

Platter rotated 90° to base

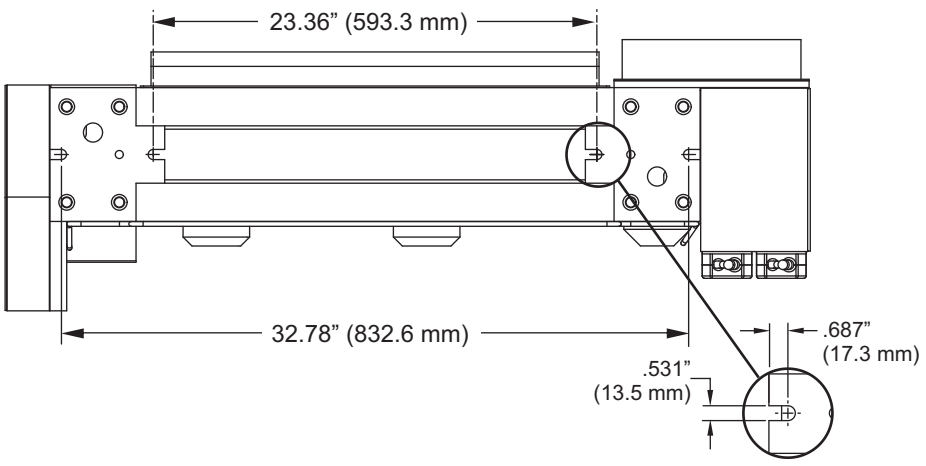

Bottom View

Slot Detail
(4X)

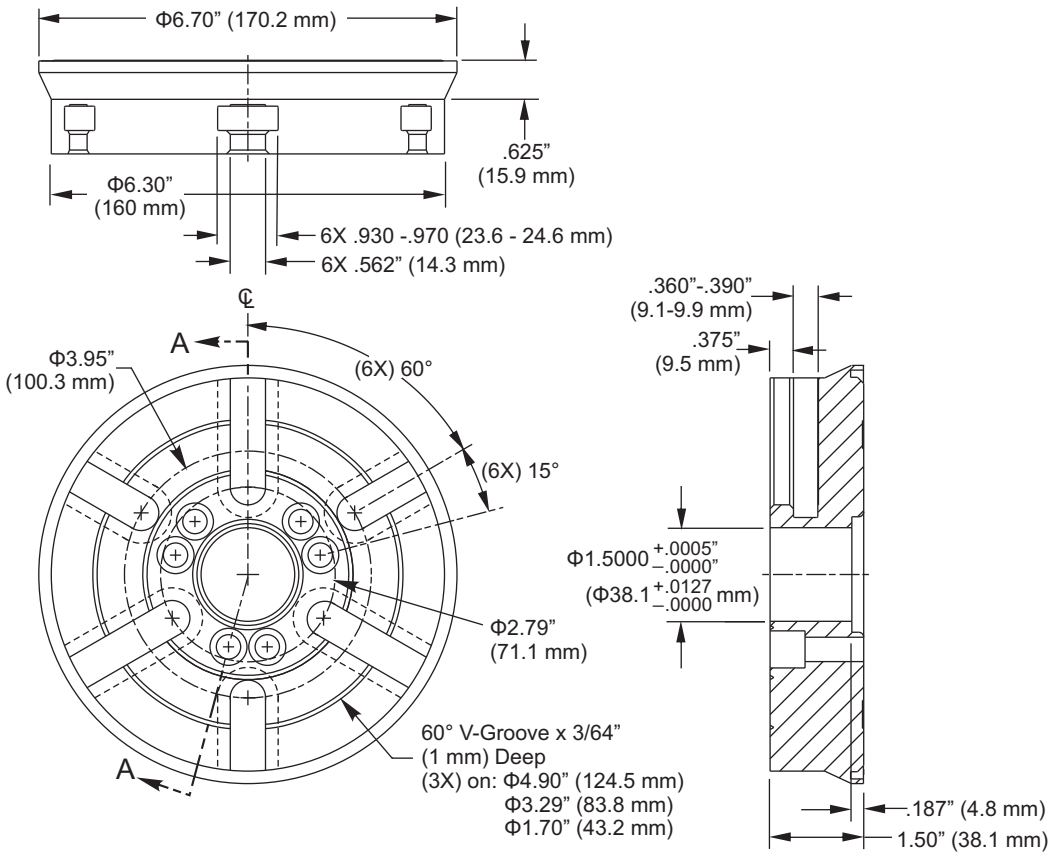

Section A-A

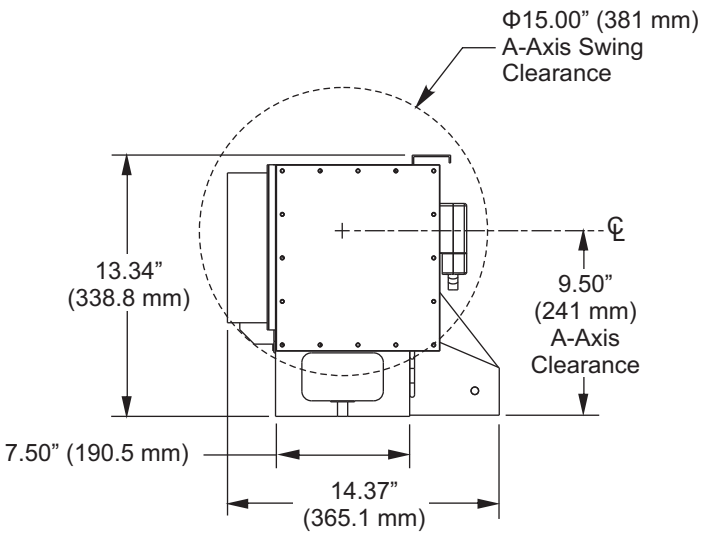

TR-160-2 Platter Dimensions